CITY OF CHARLOTTETOWN
SPECIAL MEETING OF COUNCIL
COUNCIL CHAMBERS, CITY HALL, 199 QUEEN STREET
WEDNESDAY, JANUARY 28, 2026 AT 4:30 PM

Open Meeting Live Stream Available @ www.charlottetown.ca/video
Meeting Package posted to the City's website by 9:00 am on Wednesday, January 28th

❖ Land Acknowledgement

1) Call to Order

2) Declarations of Conflict of Interest

3) Approval of Agenda

4) Presentations\Resolutions

a) Stakeholder Budget Presentation – Port Charlottetown

b) Parking Management Strategy Presentation – WSP

c) One (1) Public Works Resolution
- RFQ Award for Hostile Vehicle Mitigation (HVM) Barricades

d) Two (2) New Business Resolutions
- Appointment to SERF Charlottetown Inc.
- Appointment to CAO Annual Performance Evaluation Committee

5) Motion to Move into a Closed Session as per the Municipal Government Act of PEI

119 (1)(a) commercial information which, if disclosed, would likely be prejudicial to the municipality or parties involved.

119(1)(b) information received in confidence which, if disclosed, would likely be prejudicial to the municipality or parties involved;

119(1)(e) a matter still under consideration, on which the council has not yet publicly announced a decision, and about which discussion in public would likely prejudice a municipality's ability to carry out its negotiations

- Ongoing Litigation Matter [119(1)(e)]
- Proposed Land Purchase [119(1)(b)&(e)]
- Level 3 Electric Vehicle Charger Installation [119(1)(a)]

6) Business Arising from the Closed Session

- One (1) Public Works Resolution Anticipated (Tender Award – EV Charger Installation)

7) Adjournment



PORT CHARLOTTETOWN

2025 SEASON RECAP

YOUR FRONT ROW TO UNFORGETTABLE EXPERIENCES

PORT CHARLOTTETOWN
PRINCE EDWARD ISLAND, CANADA

2025 SEASON HIGHLIGHTS





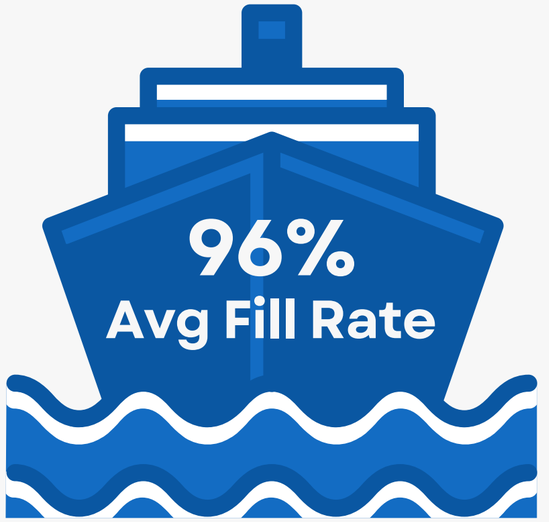

VIKING

Pearl Seas Cruises®

Holland America Line®
SAVOR THE JOURNEY

PRINCESS

TUI Cruises

OCEANIA CRUISES

RoyalCaribbean INTERNATIONAL

PONANT

P&O CRUISES

SILVERSEA

NCL
NORWEGIAN
CRUISE LINE

Celebrity Cruises

SEABOURN

AZAMARA

PHOENIX

CRYSTAL

VICTORY
CRUISE LINES

HAPAG LLOYD
CRUISES

YOUR FRONT ROW TO UNFORGETTABLE EXPERIENCES

PORT CHARLOTTETOWN
PRINCE EDWARD ISLAND, CANADA

2025 SEASON HIGHLIGHTS





Pearl Mist Overnight

- May 12–13
- October 18–19

YOUR FRONT ROW TO UNFORGETTABLE EXPERIENCES

PORT CHARLOTTETOWN
PRINCE EDWARD ISLAND, CANADA

2025 SEASON HIGHLIGHTS





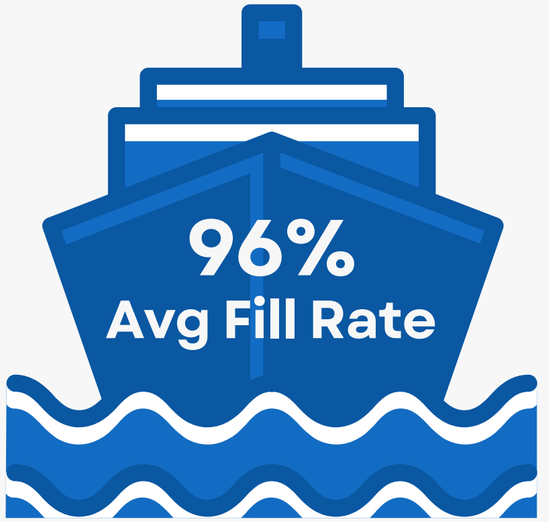



Total Passengers: 121,577

Total Crew: 54,188

YOUR FRONT ROW TO UNFORGETTABLE EXPERIENCES

PORT CHARLOTTETOWN
PRINCE EDWARD ISLAND, CANADA

2025 SEASON HIGHLIGHTS



- **September 9:**
  - NCL Gem
  - Zuiderdam
  - Silver Shadow
- **September 17**
  - Silver Shadow
  - Zuiderdam
  - Volendam
- **September 25**
  - Majestic Princess
  - Brilliance of Seas
  - Volendam
- **October 9**
  - Arcadia
  - Silver Shadow
  - Pearl Mist
- **October 14**
  - Zuiderdam
  - Viking Mars
  - Seabourn Sojurn
- **October 23**
  - Silver Shadow
  - Brilliance of the Seas
  - Hanseatic Inspiration

YOUR FRONT ROW TO UNFORGETTABLE EXPERIENCES

PORT CHARLOTTETOWN
PRINCE EDWARD ISLAND, CANADA

Welcome Program

Port Charlottetown’s welcome programming offers passengers an authentic taste of Prince Edward Island from the moment they arrive.

In partnership with Canada’s Food Island, guests are greeted with fresh oyster samples sourced from harvesters across the island, celebrating PEI’s world-class seafood and culinary heritage.

This warm, island-style welcome showcases local flavours, supports regional producers, and creates a memorable first impression of PEI as a premier food and travel destination.

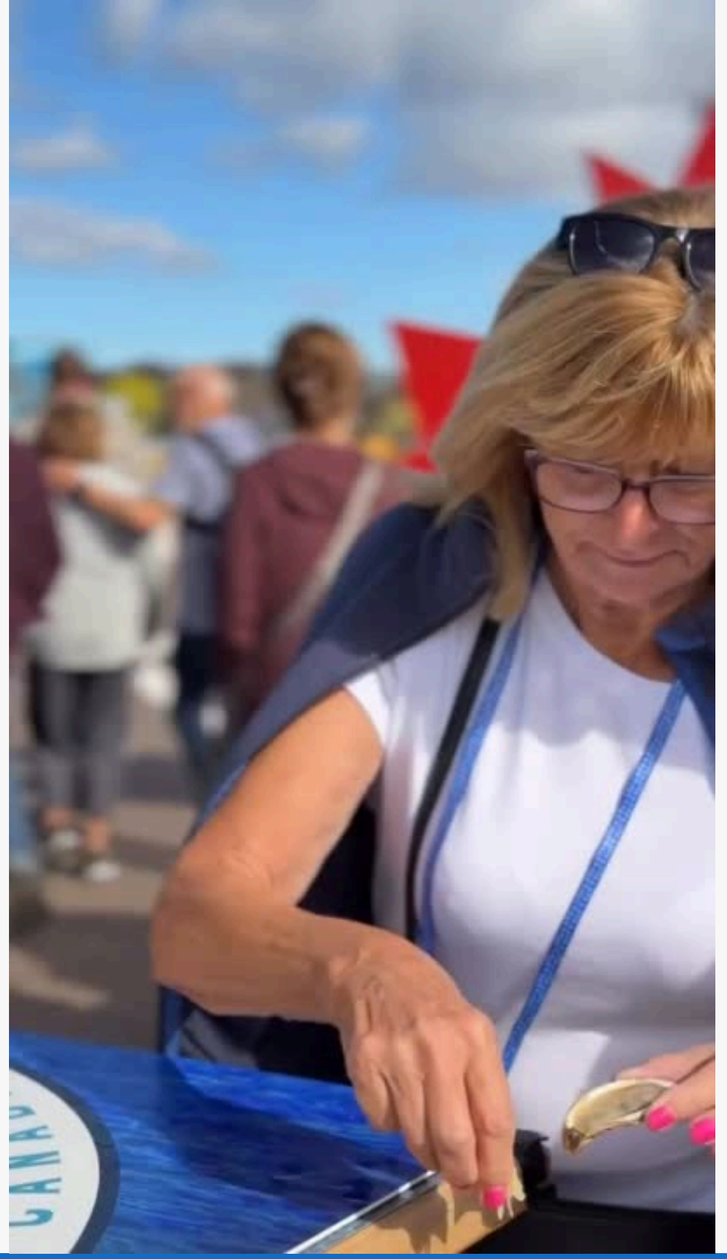

Fresh Oyster Activation

Sail Away Drink

Port Charlottetown’s sail away experience offers passengers a refreshing local farewell through a partnership with Anne of Green Gables Chocolates.

Guests are treated to a fresh, cold raspberry cordial inspired by island flavours, adding a distinctly local touch as they depart. This thoughtful send-off celebrates Prince Edward Island’s culinary charm and leaves passengers with a lasting memory of their time ashore.



Lobster PEI

In partnership with Lobster PEI, Port Charlottetown proudly brought the island's iconic seafood to life through a vibrant PEI Lobster Crawl activation, celebrating our rich local seafood scene.

Cruise guests were welcomed with complimentary, freshly made PEI lobster rolls, offering an authentic taste of the island the moment they stepped ashore. This experience highlighted the craftsmanship of our local harvesters and chefs, creating a memorable first bite of Prince Edward Island and reinforcing our reputation as a must-visit culinary destination.





YOUR FRONT ROW TO UNFORGETTABLE EXPERIENCES

PORT CHARLOTTETOWN
PRINCE EDWARD ISLAND, CANADA

Welcome & Farewell Music

Port Charlottetown's welcome and farewell music program brings the spirit of Prince Edward Island to life at every arrival and departure throughout the cruise season. Across 76 cruise ship visits, live music is presented twice daily, employing more than 150 local artists, musicians, and performers.

From traditional fiddlers and dancers to lively marching bands, this programming showcases the Island's rich cultural talent while creating an energetic, authentic atmosphere that offers passengers a warm welcome and a memorable PEI-inspired send-off.



Showcasing Island Hospitality

ATTRACTIONS
ENJOYED BY PASSENGERS



Prince Edward Island Preserve Company



Downtown Charlottetown Waterfront



Deep Roots Distillery

YOUR FRONT ROW TO UNFORGETTABLE EXPERIENCES

PORT CHARLOTTETOWN
PRINCE EDWARD ISLAND, CANADA

MILESTONES



YOUR FRONT ROW TO UNFORGETTABLE EXPERIENCES

PORT CHARLOTTETOWN
PRINCE EDWARD ISLAND, CANADA



2 Million Passengers Marked

This cruise season marked a historic milestone for Port Charlottetown as the port proudly welcomed its two millionth cruise passenger since the beginning of cruise operations. Reaching this landmark reflects decades of growth, strong partnerships, and Charlottetown's continued appeal as a must-visit destination, while highlighting the lasting impact cruise tourism has had on the port and the wider community.



Cover of 2026
Cruise & Ferry Itinerary Planner

It is an honour for Port Charlottetown and the City of Charlottetown to be featured on the cover of the Cruise & Ferry Itinerary Planner, recognizing our city as a premier maritime destination.

Showcased at every major cruise line corporation around the world, this publication offers longevity to Charlottetown. This includes our welcoming port, rich culture, and exceptional visitor experiences, placing our community firmly on the international stage for cruise and ferry partners worldwide.

Cruise Fam Tour

Port Charlottetown was pleased to welcome 24 cruise executives to Prince Edward Island—the highest number of participants hosted by any port in the region. By comparison, regional ports welcomed fewer delegates, including Corner Brook with 2, Sydney with 5, and Saint John with 18.

Through curated tours and authentic local encounters, the visit offered an immersive showcase of our port, Island culture, and visitor experiences, highlighting what makes PEI a distinctive cruise destination and strengthening relationships to support future cruise calls to Charlottetown.









YOUR FRONT ROW TO UNFORGETTABLE EXPERIENCES

PORT CHARLOTTETOWN
PRINCE EDWARD ISLAND, CANADA

NEW Interactive Photo Display

Our new interactive food display celebrates Canada’s Food Island and Prince Edward Island seafood through a bold, engaging experience on the waterfront.

Featuring oversized displays like a 6-foot oyster, lobster, and mussels, along with an A-frame and QR code linking to curated recipes, the installation highlights Island seafood favourites while inviting visitors to learn, explore, and cook with PEI’s iconic products as well as where to buy Prince Edward Island Seafood.



Inaugural Ceramonies

In 2025, Port Charlottetown proudly hosted six inaugural ceremonies, celebrating the first-ever visits of these ships to Prince Edward Island.

Each ceremony marked a significant milestone for Charlottetown, highlighting the port's growing role as a premier cruise destination and celebrating the strong partnerships that continue to bring new vessels and visitors to our Island.



Island Princess, June 18



Majestic Princess, July 29



Celebrity Silhouette, August 31



NCL Star, July 16



MS Marina, August 1



Le Champlain, October 8

YOUR FRONT ROW TO UNFORGETTABLE EXPERIENCES

PORT CHARLOTTETOWN
PRINCE EDWARD ISLAND, CANADA

Signage

Port Charlottetown has introduced new and enhanced signage to support smoother operations and an improved passenger experience.

Updated directional signage, upgraded volunteer identification, and new tour operator signage help passengers navigate the terminal area with ease, clearly find tour departures, and ensure a more welcoming, efficient experience from arrival to departure.









YOUR FRONT ROW TO UNFORGETTABLE EXPERIENCES

PORT CHARLOTTETOWN
PRINCE EDWARD ISLAND, CANADA

Infrastructure

Port Charlottetown has invested in new raised bollards as part of ongoing infrastructure improvements to enhance passenger safety while ships are docked.

This upgrade strengthens operational safety on the wharf, supporting safe movement and clearer separation between vessels, equipment, and passenger areas during cruise operations.





Sky Walk

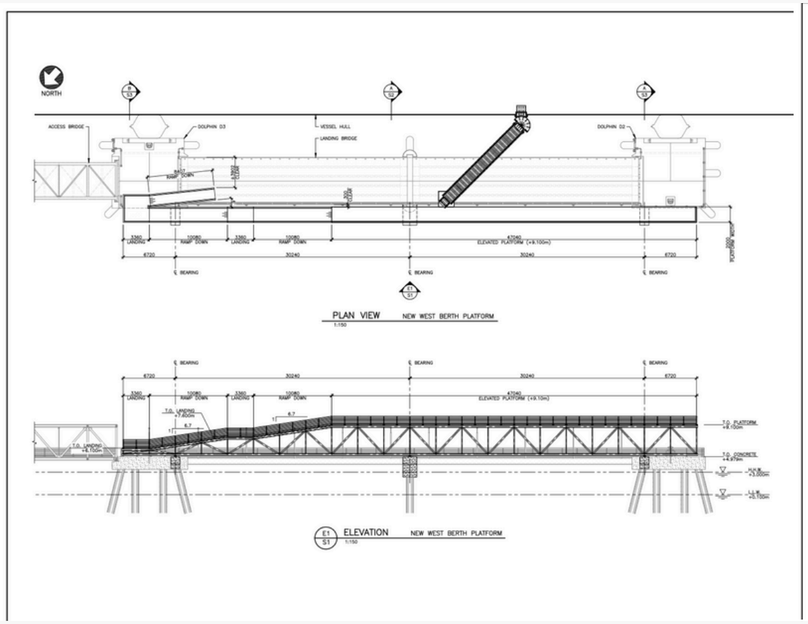

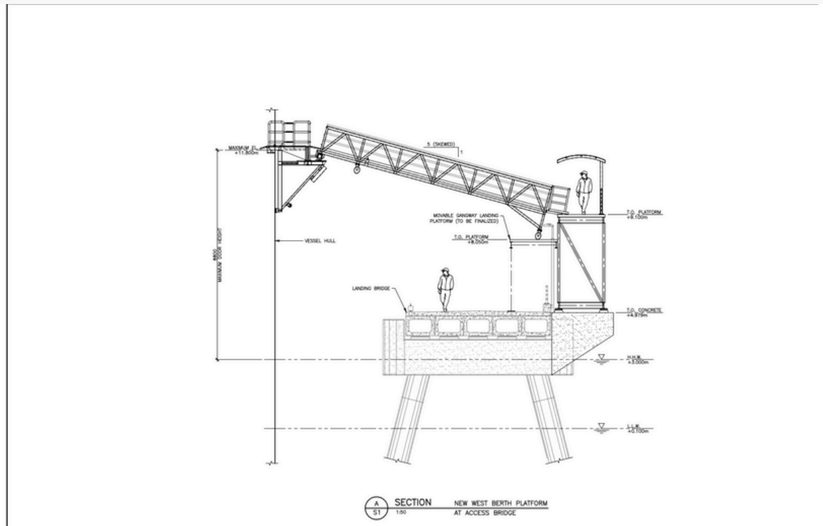

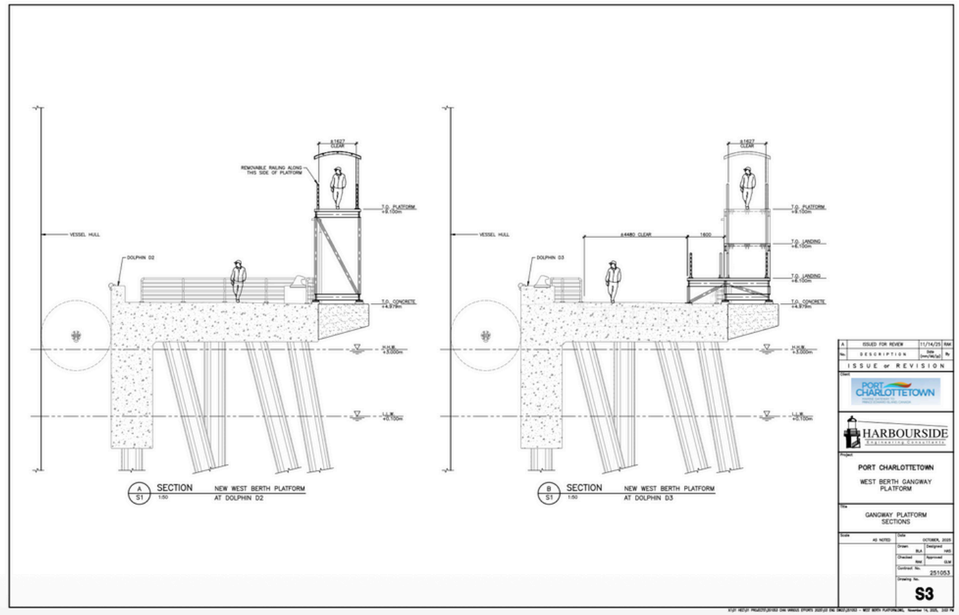

YOUR FRONT ROW TO UNFORGETTABLE EXPERIENCES

PORT CHARLOTTETOWN
PRINCE EDWARD ISLAND, CANADA

Community Event

Port Charlottetown partnered with Spin Co. Charlottetown to host a unique Wharf Ride experience that brought energy and connection to the dock.

The community-focused event featured three outdoor rides on the wharf, followed by cold plunges and sauna sessions, creating a dynamic wellness experience that invited participants to engage with the waterfront in a new and memorable way.





2025 SALES MISSIONS

• Cruise Canada New England Mission	Miami	February 2025
• Seatrade Cruise global	Miami	April 2025
• Cruise Canada New England Symposium	Halifax	April 2025
• Cruise Symposium	Norfolk Virgina	October 2025
• CLIA Cruise Forward Summit	Miami	November 2025



2026 SEASON OUTLOOK



2026 Inaugural Calls

- Seven Seas Splendor: September 11
- MS Vista: September 18
- Seabourn Ovation: September 20
- Azamara Journey: September 29
- Explora 3: October2
- Carnival Sunshine: October 21

2026 SEASON OUTLOOK



VIKING

Pearl Seas Cruises

Holland America Line
SAVOR THE JOURNEY

PRINCESS

TUI Cruises

OCEANIA CRUISES

MSC CRUISES

PONANT

Carnival

HAPAG LLOYD CRUISES

Regent SEVEN SEAS CRUISES

SCENIC
LUXURY CRUISES & TOURS

P&O CRUISES

SILVERSEA

NCL
NORWEGIAN
CRUISE LINE

Celebrity Cruises

SEABOURN

AZAMARA

PHOENIX

CRYSTAL

VICTORY
CRUISE LINES

YOUR FRONT ROW TO UNFORGETTABLE EXPERIENCES

PORT CHARLOTTETOWN
PRINCE EDWARD ISLAND, CANADA

2026 SEASON OUTLOOK



Estimated Total Passengers: 114,803

Estimated Total Crew: 52,805





YOUR FRONT ROW TO UNFORGETTABLE EXPERIENCES

PORT CHARLOTTETOWN
PRINCE EDWARD ISLAND, CANADA

2026 SEASON OUTLOOK









2026 Overnight Calls

- Pearl Mist: May 11–12
- Sapphire Princess: September 9–10
- Pearl Mist: October 17–18

YOUR FRONT ROW TO UNFORGETTABLE EXPERIENCES

PORT CHARLOTTETOWN
PRINCE EDWARD ISLAND, CANADA

2026 SEASON OUTLOOK



- September 19
  - NCL Jewel
  - Scenic Eclipse
  - Mein Schiff 1
- September 23
  - Seven Seas Splendor
  - Volendam
  - Zuiderdam
- September 29
  - Crystal Symphony
  - Sapphire Princess
  - Azamara Journey
- October 14
  - Zuiderdam
  - Azamara Journey
  - Seven Seas Splendor

Sapphire Princess OverNight Call

In 2026, Port Charlottetown will welcome its largest overnight cruise call to date with the arrival of the Sapphire Princess.

Overnight calls provide passengers and crew with extended time to experience Charlottetown’s vibrant evening scene, enjoy local dining and entertainment, and explore more of Prince Edward Island at a relaxed pace, allowing for deeper, more meaningful visits beyond a single day.



Passenger Count: 2680

Crew Count: 1100


FOUNDERS'
Food Hall
& Market
Holland America Line
FOUNDERS' Food Hall & Market



FOUNDERS'
Food Hall & Market

Strategic Location: Situated in the heart of Charlottetown on the waterfront, just steps from Port Charlottetown, offering locals & visitors easy access to local culinary delights and unique shopping experiences.

Showcasing Local Flavors: Highlighting local vendors & authentic taste of Prince Edward Island, including artisanal products, fresh seafood, and craft beverages.

Seasonal Programming:
Founders' seasonal programming brings the waterfront to life with a vibrant mix of night markets, trivia nights, and live music both indoors and outdoors. These events create a welcoming atmosphere where locals and visitors can gather, enjoy great food and drinks, and experience the energy year-round.

Community Hub: Celebration of community throughout the season

YOUR FRONT ROW TO UNFORGETTABLE EXPERIENCES

PORT CHARLOTTETOWN
PRINCE EDWARD ISLAND, CANADA

Proudly Canadian Celebration

Founders’ Food Hall & Market’s Proudly Canadian event was an all-day celebration of Canadian culture, showcasing the best of homegrown talent and flavours.

From engaging culinary demos and local maker vendors to performances by Canadian musicians, culminating in a high energy closing set by Fabulously Rich, the beloved Tragically Hip cover band, the event brought the community together in true Canadian spirit.







PEI Marathon

The 2025 PEI Marathon marked a milestone as the largest marathon weekend in Prince Edward Island history, welcoming a record 3,188 participants.

As a proud sponsor of the Saturday race start line, Port Charlottetown was pleased to support an event that brought runners, families, friends, and supporters together, energizing the downtown community and celebrating PEI’s vibrant, active spirit.



Summer Kick Off

Founders' Food Hall & Market's Summer Kick-Off was a vibrant outdoor celebration that brought the waterfront to life for a perfect summer evening.

With a family fun zone featuring inflatables and mini games, live outdoor music, and vendors BBQing on the patio, the event created an inviting atmosphere that drew the community together to celebrate the start of the season.



Harvest Fest

Founders’ Food Hall & Market’s Harvest Fest was a standout community success, bringing energy and connection to the waterfront during the fall shoulder season.

With live music, family-friendly programming, and a lively pumpkin carving contest featuring talented Prince Edward Island artists, the event created a warm, festive atmosphere that drew locals and visitors together and extended the momentum of seasonal activations.





Deck the Hall

Deck the Hall returned this year with an elevated festive experience, featuring enhanced seasonal décor and a brand-new Santa area that delighted guests of all ages.

With expanded programming including princess-themed holiday parties, trivia nights, culinary demonstrations, and more, the event offered a welcoming and inclusive celebration designed to bring the community together and create memorable experiences for everyone.

The season officially kicked off with a special sneak peek, inviting community partners to be among the first to experience the new Deck the Hall programming.







YOUR FRONT ROW TO UNFORGETTABLE EXPERIENCES

PORT CHARLOTTETOWN
PRINCE EDWARD ISLAND, CANADA

Capital New Year

Capital New Year, presented in collaboration with the City of Charlottetown, was a true celebration for everyone, welcoming an estimated 13,000 attendees throughout the day.

With an exciting new layout, including the main stage moved to the parking lot and the outdoor rink open to the public. The event created an energetic, inclusive atmosphere and a memorable night filled with community spirit ending with fireworks on the waterfront.









Commercial Port Operations

Port Charlottetown plays an integral role in receiving essential resources

- 98% of fuel supply for Prince Edward Island arrives via Port Charlottetown
- Sand, stone and gravel imported through Port Charlottetown supports road building and construction industry, with City and Province as primary users
- Fertilizer imported from all over the world supporting our agricultural community
- Critical piece of infrastructure

Request

Charlottetown Harbour Authority Inc.	
Property Tax Summary	**Total**
Provincial Commercial	$55,783.50
Provincial Non-Commercial	$46,661.00
Total Provincial	**$102,444.50**
Municipal Commerical	$94,460.06
Municipal Non-Commercial	$31,262.87
Total Municipal	**$125,722.93**
Total Property Tax	**$228,167.43**

Thank you

PORT CHARLOTTETOWN
PRINCE EDWARD ISLAND, CANADA



YOUR FRONT ROW TO UNFORGETTABLE EXPERIENCES

PORT CHARLOTTETOWN
PRINCE EDWARD ISLAND, CANADA

CITY OF CHARLOTTETOWN

PARKING MANAGEMENT STRATEGY

Charlottetown City Council | January 27, 2026



Study Purpose

The City wants to manage parking in an effective and sustainable manner that serves the needs of the community as a whole

- Engage with stakeholders and the community;
- Identify issues, challenges, and opportunities for improvement;
- Develop recommendations to optimize parking resources;
- Determine if parking supply is meeting demand; and
- Propose solutions to improve accessibility and promote sustainability.

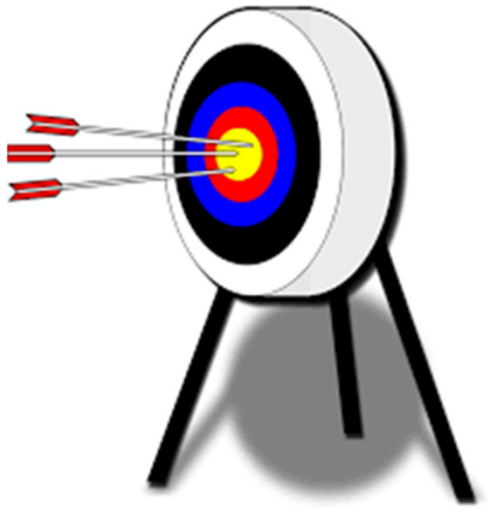

Study Process

Starts with Community Engagement

- Interviews with 13 key organizations who have a significant reliance on parking
- A workshop session with City staff
- A workshop session with downtown businesses
- A public open house session
- An online survey

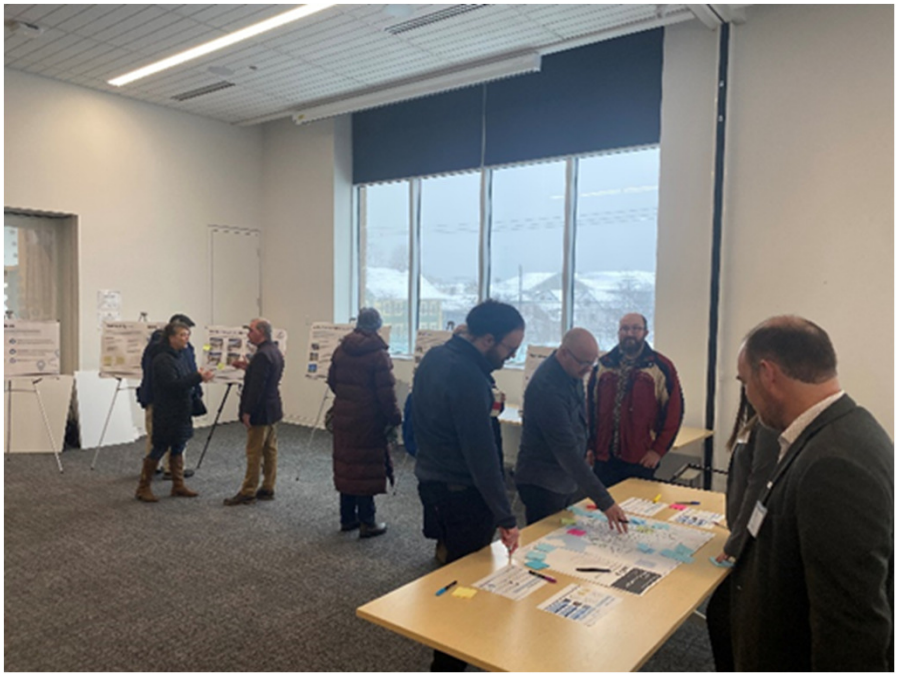

Study Process

What we heard

- Parking options are not adequate
- Concern with sidewalk patios
- Concern with buses on Grafton
- Openness to new technologies for parking payment
- Better communication with the City
- Parking commission is needed

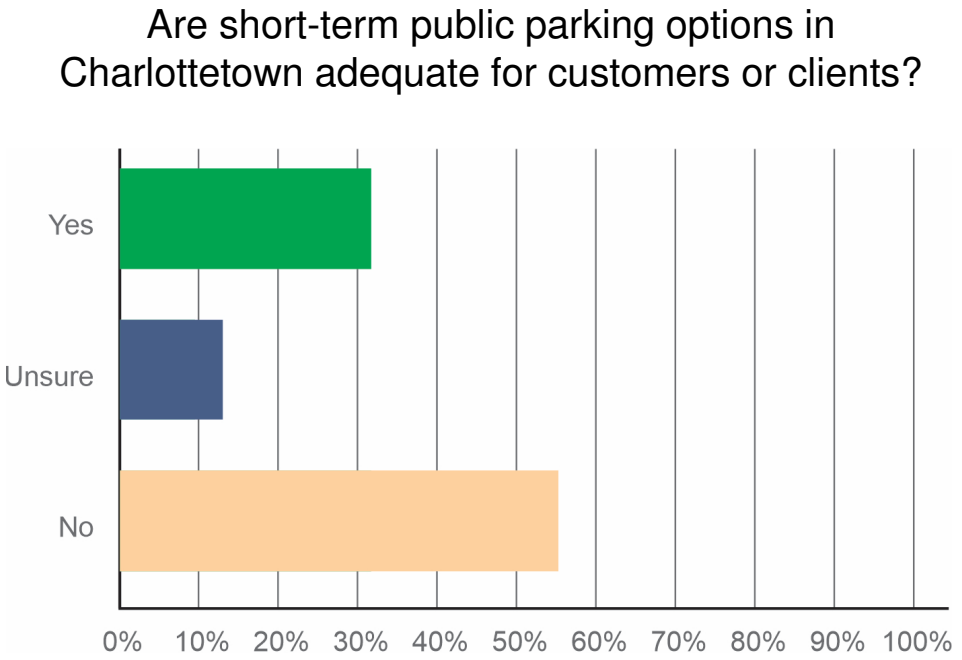

Existing Condition

Determine whether parking supply is meeting demand

- Applied typical parking rates to a survey of business square footage

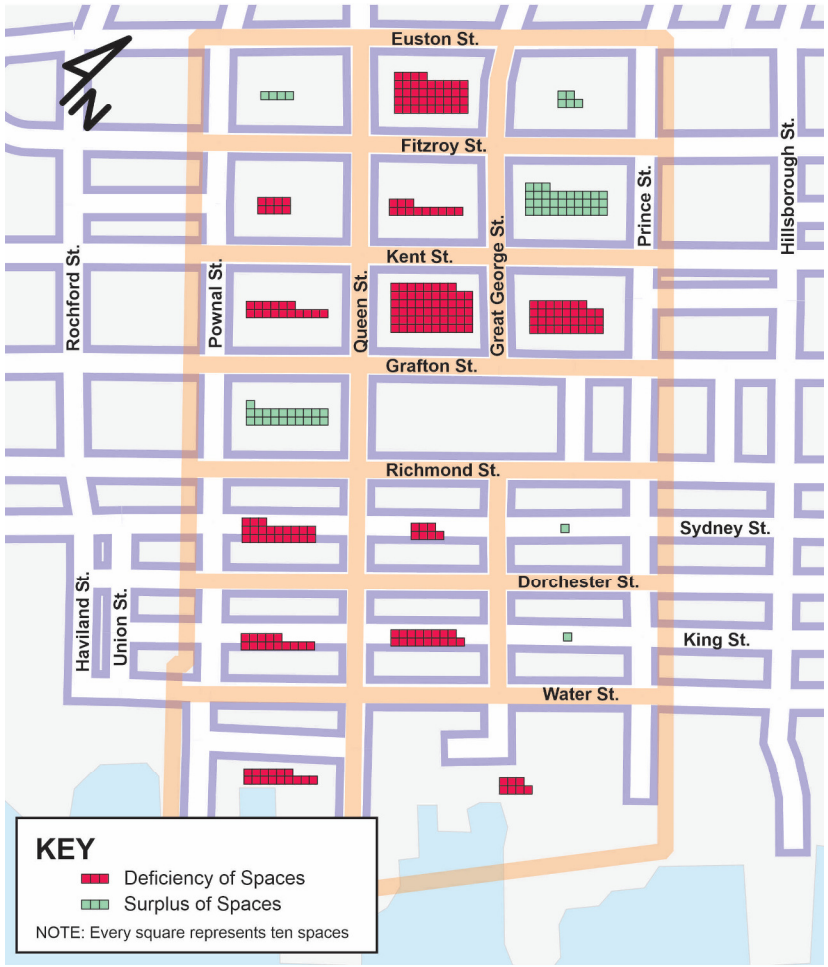

Existing Condition

How much parking is being utilized?

- Occupancy measured in January-February using time lapse cameras

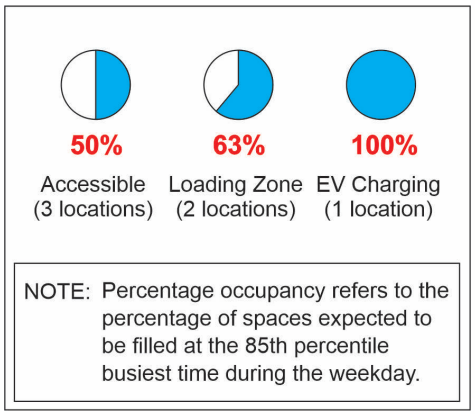

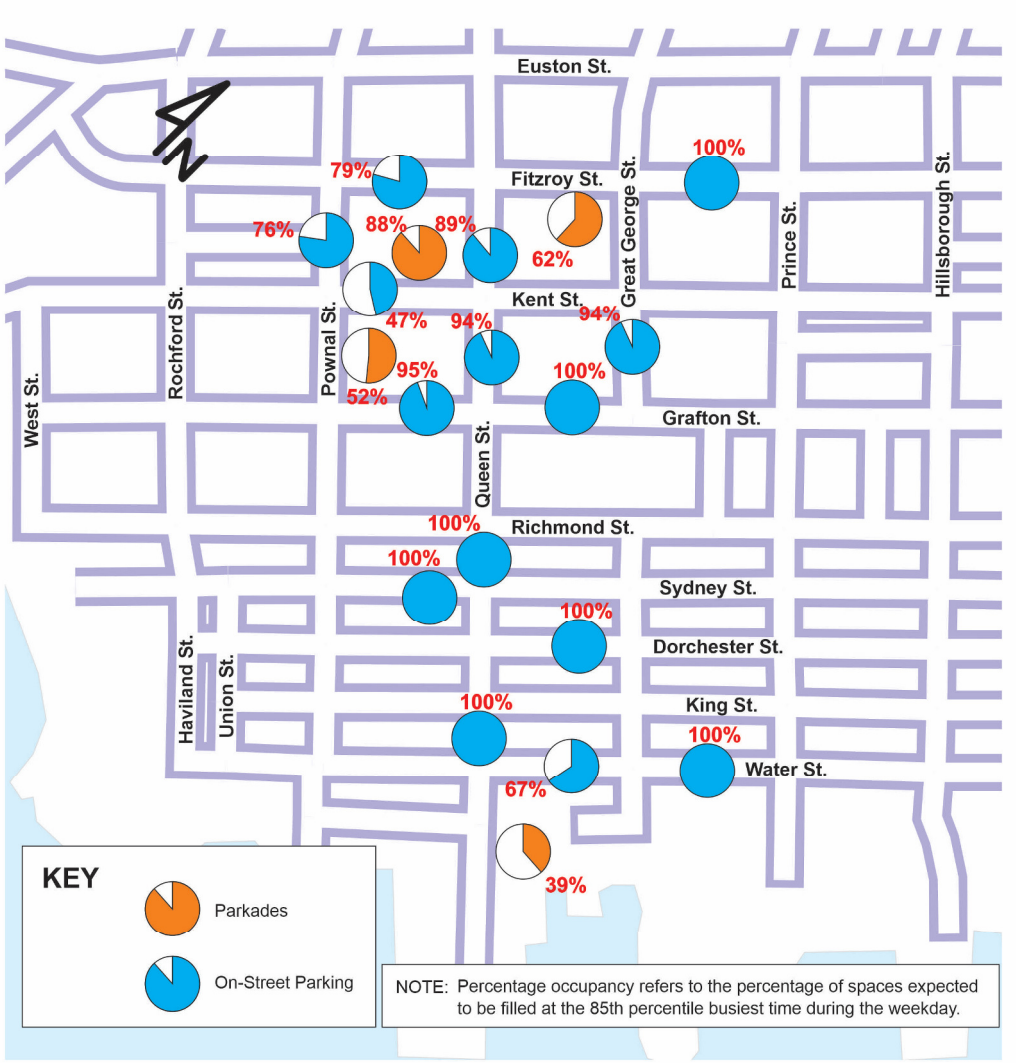

Existing Condition

One hour parking controls are being blatantly ignored

- Only about 15% of vehicle are parked for one hour or less

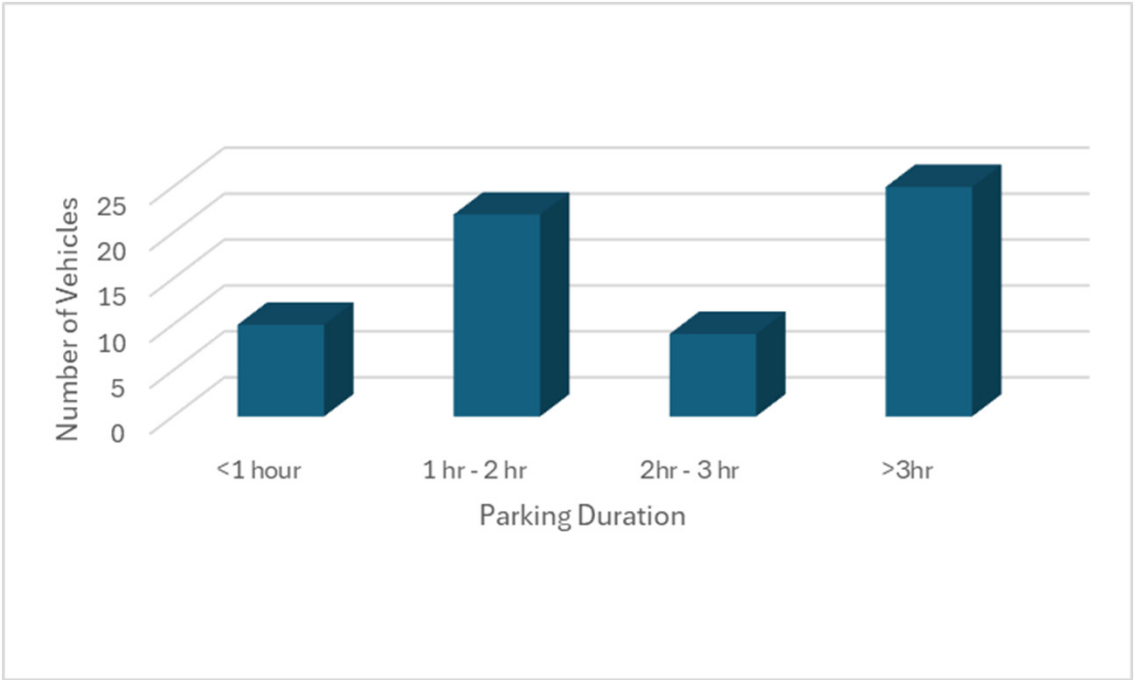

Short-term Actions (0-2 years)

Minimal added staff time or capital investment

- More directional signs
- Priority to active transportation and transit when allocating curb space
- Reduce or remove parking minimums for strategically located residential development
- Parkade management
- On-street parking additions and deletions



Short-term Actions (0-2 years)

Adjust parking payment

- Increase on-street rates, decrease hourly and daily parkade rates
- Shift demand to parkades and create more parking opportunities on-street
- Increase on-street rates in the summertime
- Increase monthly parking in parkades to $125 (up from $115) to encourage occasional alternative trip choice

	Existing and Proposed Rates					
	Sept-June			July-Aug		
	Hourly	Daily	Monthly	Hourly	Daily	Monthly
Existing on-street payment areas	$1.50			$1.50		
	$1.60			$2.00		
Parkades	$1.25	$8.75	$115.00	$1.25	$8.75	$115.00
	$1.20	$8.00	$125.00	$1.20	$8.00	$125.00
Extended on-street payment areas	Free			Free		
	$1.00	$6.50		$1.00	$6.50	

KEY TO CELLS:

- Blue shading indicates existing price
- White shading indicates proposed price
- Grey shading indicates "Not Permitted"

Note: All prices are inclusive of HST

Medium-term Actions (2-4 years)

Create a parking department

- One new full-time position
- Establish a cost centre – offset costs with revenues
- Create a multi-year maintenance program
- Develop a monitoring program
- Meet periodically with businesses

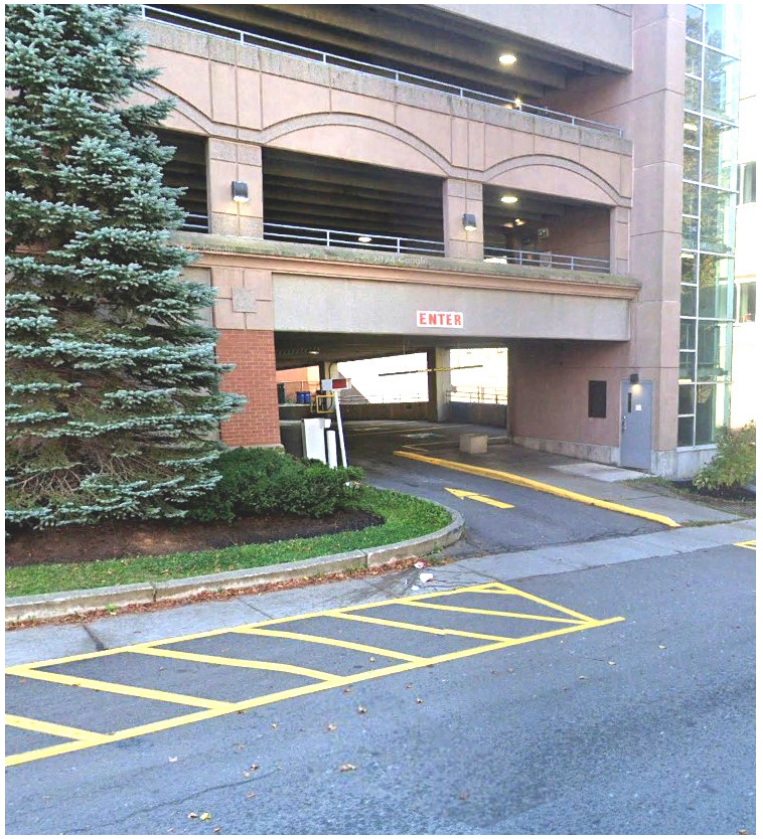

Medium-term Actions (2-4 years)

Replace parking meters with pay stations

- Pay stations allow for more convenient payment options
- Pay-by-plate system
- Expand payment area into residential neighbourhoods adjacent to downtown (exempting residents from payment)



Long-term Actions (4+ years)

Increase parking supply

- Convert surface lot at Sydney and Great George to two-level parking
- Explore opportunities for expanding existing parkades (possibly through development partnerships)
- Explore opportunities for a fourth parkade



Financial Summary

Time Frame	One-Time Capital Cost	Annual Operating Cost	Notes
Short Term (0-2 years)	$10,000	$40,000	Directional signs Some staff time
Medium Term (2-4 years)	$1,250,000	$90,000	Staff position plus support Pay station conversion
Long Term (4+ years)	$5,000,000	$120,000	Added parking supply with operating costs

THANK YOU

wsp.com



CITY OF CHARLOTTETOWN
RESOLUTION OF COUNCIL #_____

Public Works Committee #1

MOTION CARRIED _____

MOTION LOST _____

Date: January 28, 2026

Moved by Councillor Mitchell Tweel

Seconded by Councillor John McAleer

RESOLVED:

That, as per the conditions of the Public Request for Quotes for "Hostile Vehicle Mitigation (HVM) Barricades" the submission of Meridian Rapid Defense Group, in the amount of $430,477.86 (plus all applicable taxes) be accepted,

And that a budget transfer from Public Works Capital account for "Parkades Major Repairs & Parking - New Public Parking Spots" in the amount of $80,477.86 (plus all applicable taxes) to "Urban Beautification - Event Safety Barriers" be accepted,

And that the Mayor and CAO are hereby authorized to execute standard contracts and agreements to implement this resolution.

City of Charlottetown Committee Report

Report No: PW-2026-01-21-001

Date: January 21, 2026

Directed to Council through the following Committee:
Public Works Committee

Attachments:
- Meridian RDG Specification Sheet

Reporting Department:
Public Works

Other Associated Departments:
Tourism & Economic Development
Emergency Services (Fire and Police)

Prepared by:
Berry Genge

Report Title:
Hostile Vehicle Mitigation (HVM) Barricades

Report Purpose:
To inform Council of the results of a recent public tendering process associated with this project and recommend awarding to the highest scoring bid.

Staff Recommendation:
That Council, as per the conditions of the public tender for "Hostile Vehicle Mitigation Barricade RFQ", award the submission of Meridian Rapid Defense Group, in the amount of $ 430,477.86 (plus all applicable taxes) with $350,000.00 to come from budget account "Event Safety Barriers" and $80,477.86 (plus all applicable taxes) to be transferred from "New Public Parking Spots" as this line item will not be actualized in the 2025-2026 budget year.

Report Details:

The Public Works Department issued a public tender, closing December 5th, 2025, at 2:00 PM local time, for the purchase of HVM barricades. Bids were evaluated based on their technical merit and safety compliance, as well as total bid price. The City received five (5) submissions as follows:

Company Name	Total Submission Price (excl. HST)	Technical Score (/45)	Financial Score (/15)	Total Score (/60)
Maritime Purchasing Inc.	$489,563.77	34	2	36
Meridian Rapid Defense Group	$430,477.86	45	2	47
Binns Canada Ltd.	$374,765.04	37	2	39
Sunbelt Rentals - Perimeter Security Division	$173,679.00	26	15	41
Rologuard Global Company, LLC	Disqualified	-	-	-

Meridian Rapid Defense Group was the highest scoring bidder, scoring full points in the technical category. The safety and crash test certifications are in line with the needs of the City of Charlottetown, as identified by members of the Emergency Services team (Fire and Police Services).



Figure 1: Meridian Archer 1200 Vehicle Barricade (image obtained from whnt.com)

Event safety barriers have been under consideration for several years as a means of enhancing public safety during on-street events in Charlottetown that require full road closures, such as past events on Queen Street and Kent Street. These types of events introduce unique safety and operational challenges that require a robust and reliable barrier system.

To determine an appropriate solution, extensive interdepartmental consultations were undertaken involving Emergency Services, Public Works, Economic, Tourism and Cultural Development, as well as Charlottetown Police and Fire Services. These discussions focused on identifying the technical, operational, and safety specifications necessary to effectively secure streets while maintaining emergency access and event functionality.

While the bid received exceeded the originally allocated budget for this item, the specifications developed through Emergency Services and refined through consultation with the above departments indicate that the products proposed by Meridian Rapid Defense Group are the most suitable for Charlottetown's needs. Based on their technical capabilities and proven performance, these barriers are the recommended option for safely securing city streets during major events.

Council or Committee History:
Council approved the purchase as part of the 2025/2026 Capital Budget.

Financial Implications:
Budget allocation for this project will have $350,000.00 come from the 2025/2026 Capital Budget account "Event Safety Barriers" as well as $80,477.86 (plus all applicable taxes) to be transferred from "New Public Parking Spots" as this line item will not be actualized in the 2025-2026 budget year.

<u>2025-2026 Capital Budget Line Items:</u>
Public Works - Beautification – Event Safety Barriers - $350,000
Public Works – Parkades Major Repairs & Parking - $500,000

Public Engagement and Communication:
N/A

Legislative Authority: PEI MGA, Part 5, Division 2	
Strategic Alignment: Infrastructure and the Environment	
Reviewed By:	
Manager YG, January 12, 2026	**CAO/Director** RDM January 16, 2026
Committee Recommendation: (if differing from staff)	

Archer 1200 Barrier Specifications

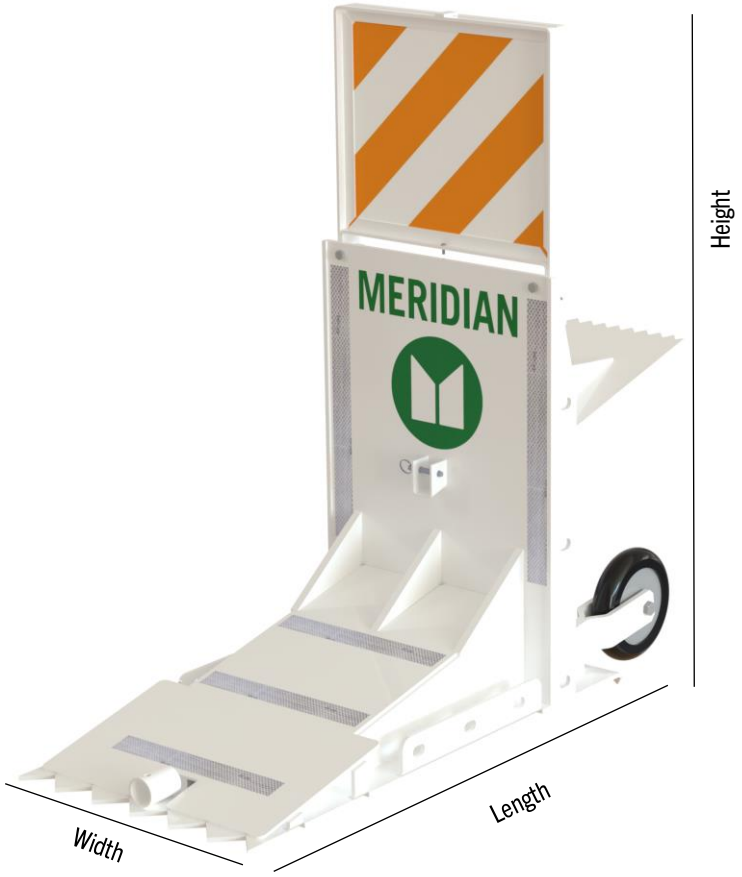

Archer 1200 Barrier Specifications

- Length- 48 in.
- Width- 24 in.
- Height- 57 in.
- Weight- 680 lbs.
- Surface Area- 11,288 square in.
- Material- ASTM A36 steel/AR500

Powder coat Specifications

- Gloss 60'angle (ASTM D-523-89) 80+
- Hardness (ASTM D-3363-92A) H – 2H
- Flexibility (ASTM D-1737-89) 1/8 inch
- Adhesion (ASTM D-3359-95A) 5B
- Impact direct/indirect (ASTM D-2794-93) 120 in-lbs.
- Salt Spray (ASTM B117) 1000 Hrs.

Caster Wheel Specifications

- Type- Black soft rubber tread, crowned profile
- Core Material- Aluminum core
- Wheel Diameter- 10 in.
- Wheel Width- 2.25 in.
- Capacity- 400 lbs.

Archer Drop Deck Trailer 1000



Mobile deployment in minutes. Custom built to load and haul up to eight Archer 1200 Barriers, making barrier deployment fast and easy.



- The unique drop deck design brings the entire deck level to the ground.

FEATURES

- Hauler mount attachment
- ADA cable cover storage compartments
- Beam Gate beam cradles
- Upgraded deck bearings
- Upgraded solar panel
- Upgraded tire ratings

WE OFFER RENTAL AND PURCHASING OPTIONS! GIVE US A CALL TO DISCUSS YOUR NEEDS (434) 529-6903

MERIDIAN
RAPID DEFENSE GROUP

Archer® Rapid Gate

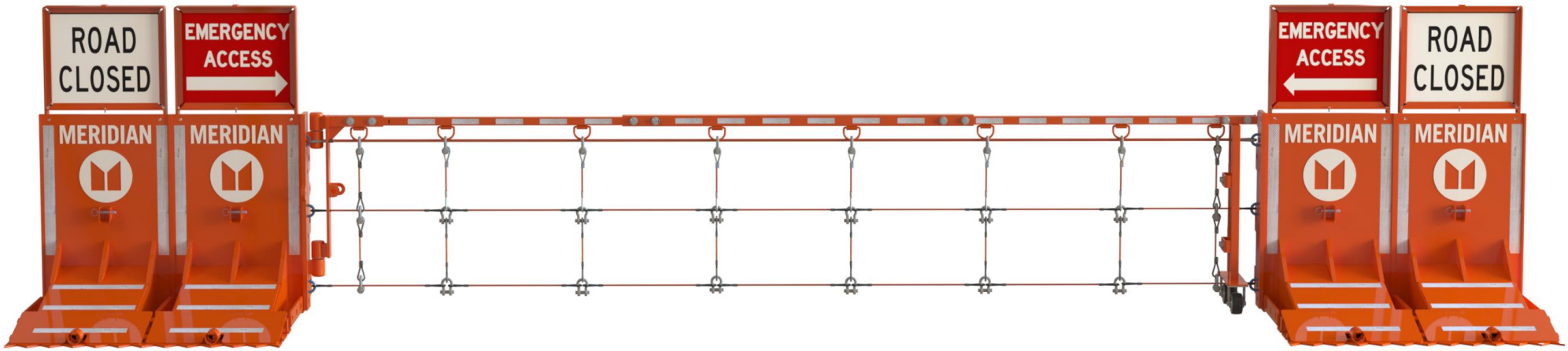

FEATURES

- Expandable to 10ft,12ft, and 14ft
- Fast to assemble
- Ideal for road closures
- Great for construction sites
- Crash certified ASTM P2 rating!
- #1 emergency access gate

180 Degree Horizontal Rotation

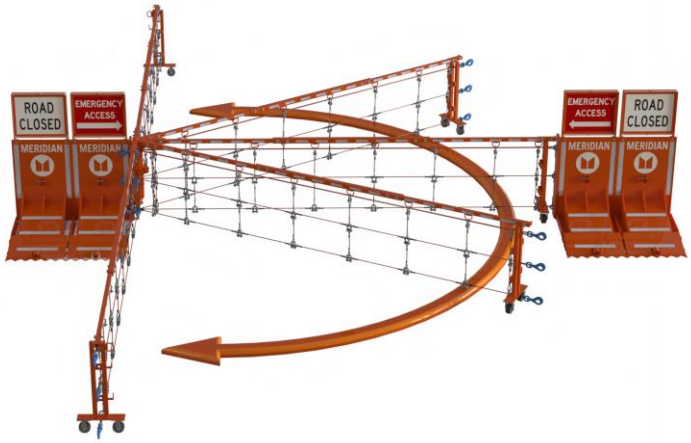

MUTCD

The Archer® Rapid Gate is designed to be visible on roads by using bright Traffic Orange paint and HIP reflective decals. The directional signage is all MUTCD approved.

WE OFFER RENTAL AND PURCHASING OPTIONS! GIVE US A CALL TO DISCUSS YOUR NEEDS (434) 529-6903

MERIDIAN® RAPID DEFENSE GROUP

Archer Hauler Specifications



Lift 700 lbs. of steel with ease

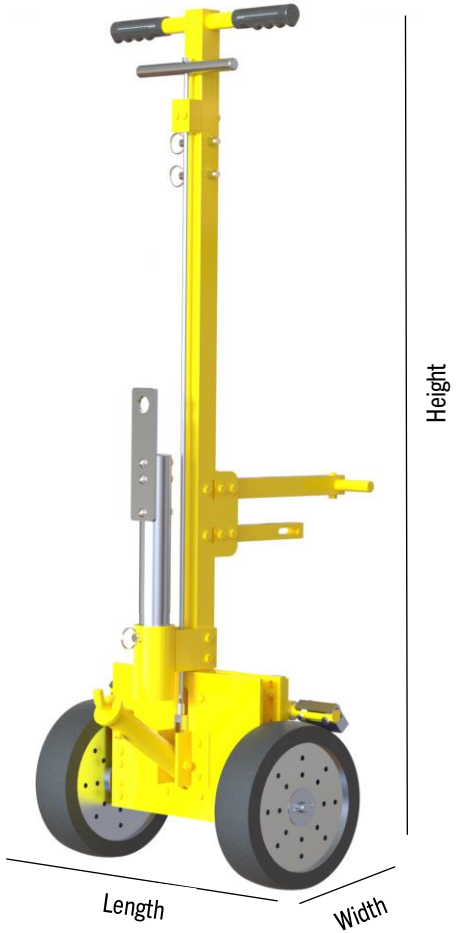



Simple storage on Archer 1200 Barriers

Scan for more information

SCAN ME

Archer Hauler Dimensions

- Length- 18 in.
- Width- 12 in.
- Height- 53 in.
- Weight- 40 lbs.
- Material- Aluminum 6061-T6

Archer Hauler Features

- Adjustable brakes
- 3,000 lb. capacity
- Solid core tire
- Durable powder coating

Archer Arrestor Cable Specifications





Arrestor Cable Specifications

- Length- 48 in.
- Width- 4 in.
- Depth - 2 in.
- Weight- 11 lbs.

Wire Rope Cable Specifications

- Construction- 6x19 IWRC
- Nominal Diameter-0.625 in & 0.375 in.
- Finish- Galvanized
- Lay Direction- RHRL
- Specification- ASTM A 1023 or RR-W410G
- Grade of Steel Used- EIPS
- Min. Breaking Strength- 24,004 lbs.

Wire Rope Cable Chemical Composition

- C: 0.69-.0.73%
- Si: 0.200.024%
- S: Max 0.025%
- P: Max 0.025%
- Mn: 0.54-0.64%
- P: Max 0.025%
- Mn: 0.54-0.64%

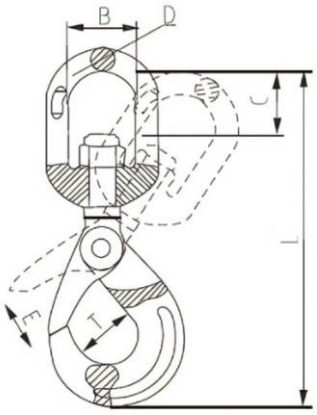

G-100 Swivel Hook Specifications

- Weight- 2.6 lbs.
- Quenched and tempered alloy steel
- EN 1677-3 & ASME B30.26, PAS1061
- Full swivel under load
- Federal Specification RR-C-271G Type IVA, Grade A, Class 2

G-100 Specifications Dimensions

- B- 1.42 in.
- C- 1.44 in.
- D- 0.51 in.
- T- 1.35 in.
- L- 7.35 in.
- E- 1.28 in.

ADA 3-Channel Cable Protector Specifications

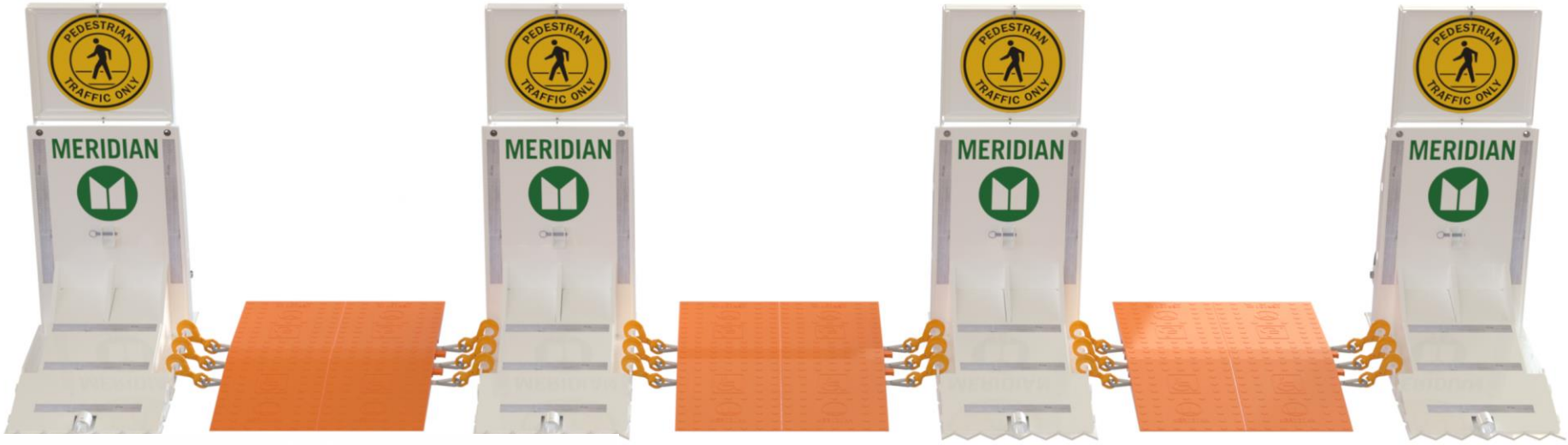



ADA 3- Channel Dimensions

- Length- 48.0 in.
- Width- 32.25 in.
- Height- 1.5 in.
- Weight- 20 lbs.
- 4.5-degree incline

ADA 3- Channel Cable Protector

- Easily allows strollers and wheelchairs
- High visibility color
- Ideal for pedestrian traffic control
- Easy to use interconnects
- Lightweight design

MERIDIAN®
RAPID DEFENSE GROUP

Modular by design,
flexible by location.

ARCHER ® 1200 BARRIERS

Standard Colors



RAL 3020
TRAFFIC RED



RAL 2009
TRAFFIC ORANGE



RAL 1016
SAFETY YELLOW



RAL 6024
TRAFFIC GREEN



RAL 5022
NIGHT BLUE



RAL 7042
TRAFFIC GRAY



RAL 9055
JET BLACK



RAL 9003
SIGNAL WHITE

Meridian Certified Training

Course Facts

What You Receive

Annual Certification Certificate from Meridian Academy

Learning Sessions

100% in person
Available anytime at your convenience

Duration

8 Hours

Course Updates

Content is updated and current

Course Access

Review course outline
24/7

About This Course

Meridian Academy 8-Hour Certified Training for Perimeter Security in Public Places is a vital educational tool that equips perimeter security professionals with the knowledge and skills to create a certified vehicle safety mitigation plan. This certification is a valuable asset for anyone involved in perimeter security, ensuring they are well prepared to face the challenges and responsibilities of this dynamic industry.

MERIDIAN ACADEMY

Course Outline

- Module 1- Challenges of perimeter security in public places
- Module 2- Traffic management planning and speed analysis
- Module 3- Emergency services planning
- Module 4- Vehicle Safety Mitigation Planning
- Module 5- Certified crash test analysis and standards
- Module 6- Equipment and configurations
- Module 7- Staging, setting and deploying of equipment
- Module 8- Methodology for opening roadways
- Module 9- After action reporting
- Module 10- Meridian safety training

MERIDIAN RAPID DEFENSE GROUP

MERIDIAN®
RAPID DEFENSE GROUP

MERIDIAN and The SAFETY Act

MERIDIAN Rapid Defense Group ("MERIDIAN") has been issued both the official Designation and Certification of Qualified Anti-Terrorism Technology ("QATT") under the United States' SAFETY Act by the U.S. Department of Homeland Security ("DHS").



Below is the summary of these extraordinary awards and answers to frequently asked questions:

- The Safety Act ("ACT") is a 2002 U.S. Federal Law that creates a liability management system for providers of approved anti-terrorism technologies and solutions. The ACT protects MERIDIAN, its customers, and users of its Technology from liabilities for claims arising out of an act of "terrorism." In the over 20-year history of the ACT, only about 1,000 companies have been granted these invaluable protections backed up the U.S. Government.

- MERIDIAN and its customers have been granted these protections because MERIDIAN successfully completed the comprehensive and exhaustive review and examination by the experts, scientists, technicians, and business and insurance professionals of the DHS.

- The MERIDIAN Technology covered by this Designation and Certification are the Archer 1200 Barrier, the Archer Field Tow Bar, the Archer Hauler, the Archer Rapid Gate, the Archer Beam Gate, and the Archer Guard, including all training, site surveys, installation and deployment services, technical documentation, manuals, and technical specifications. *This means that use of any or all of these solutions that make up the Technology affords the customer or user the protections under the ACT.*

- The protections awarded to MERIDIAN under the ACT extend to and flow down to all MERIDIAN customers, suppliers, vendors, customers, users, and others in its supply chain from third party claims related to any act of terrorism as determined by DHS. And yes, these protections by the U.S. Federal Government are extended to both U.S. and international customers. And yes, these protections cover acts of terrorism that occur or originate outside the United States.

- The protections are truly extraordinary in substance and process. Customers of MERIDIAN are immune from liability for the use of MERIDIAN Technology including its equipment, solutions, and training. MERIDIAN's liability is strictly limited to its approved insurance coverage. All claims arising from a terrorist act in any way allegedly involving or impacting MERIDIAN and its Designated and Certified Technology may only be brought in U.S. Federal Courts. All claims for punitive damages and noneconomic damages are barred. What this means is that MERIDIAN will not be destroyed by either the number of claims or the costs of defending against such claims. MERIDIAN cannot be forced into faraway courts in another country. MERIDIAN will be there to service and provide to its customers before and after any act of terrorism. And MERIDIAN's customers will also be protected from liability in U.S. Federal Courts and by the obligations of the U.S. Government as established in the formal laws of the U.S. under the SAFETY Act to indemnify and defend.

- And finally, MERIDIAN has been specifically authorized by DHS on behalf of the U.S. Government to inform you – the customers, clients, subcontractors, vendors, and users of MERIDIAN's Designated and Certified Qualified Anti-Terrorism Technology – that you are immune from liability and claims of liability arising from acts of terrorism. DHS has backed up this message by also specifically authorizing our display of the official seal and mark of the SAFETY Act as seen above.

CONGRATULATIONS! You, too, can protect and defend against terrorism from vehicle attacks. You, too, can save lives and prevent horrendous injuries. And you can achieve your goals and perform your duties with the confidence of knowing you will not be subject to liabilities and attacks from the legal system.

CITY OF CHARLOTTETOWN
RESOLUTION OF COUNCIL #_____

New Business #1

MOTION CARRIED _____

MOTION LOST _____

Date: January 28, 2026

Moved by Councillor Terry Bernard

Seconded by Councillor Kevin Ramsay

RESOLVED:

That the City of Charlottetown appoint Charlotte Nicholson as Chair of SERF Charlottetown Inc., effective January 28, 2026.

CITY OF CHARLOTTETOWN
RESOLUTION OF COUNCIL #_____

New Business #2

MOTION CARRIED _____

MOTION LOST _____

Date: January 28, 2026

Moved by Councillor

Seconded by Councillor

RESOLVED:

WHEREAS Council is responsible for conducting the annual performance evaluation of the Chief Administrative Officer (CAO);

AND WHEREAS Council may appoint a committee to oversee and carry out this evaluation process;

THEREFORE BE IT RESOLVED THAT Council hereby appoints the following members of Council, as recommended by His Worship Mayor Brown, to the CAO Annual Performance Evaluation Committee:

Mayor Philip Brown,
Councillor Norman Beck,
Councillor Terry Bernard, and
Councillor Julie McCabe